ELECTRIC FURNACE
ECF3

10KW, 15KW, 18KW,
20KW, 23KW, 27KW

INSTALLATION, OPERATION & MAINTENANCE MANUAL

An ISO 9001-2008 Certified Company

2201 Dwyer Ave
Utica, NY 13501
www.ecrinternational.com

Information and specifications outlined in this manual were in effect at the time of approval for printing for this product. ECR International reserves the right to discontinue, change specifications, or system design at any time without notice and without incurring any obligation, whatsoever.

Check our web-site frequently for updates: www.ecrinternational.com

P/N# 240008482, Rev. A [06/2010]

ECF - DIMENSIONS

FIGURE 1-1 ECF Dimensions

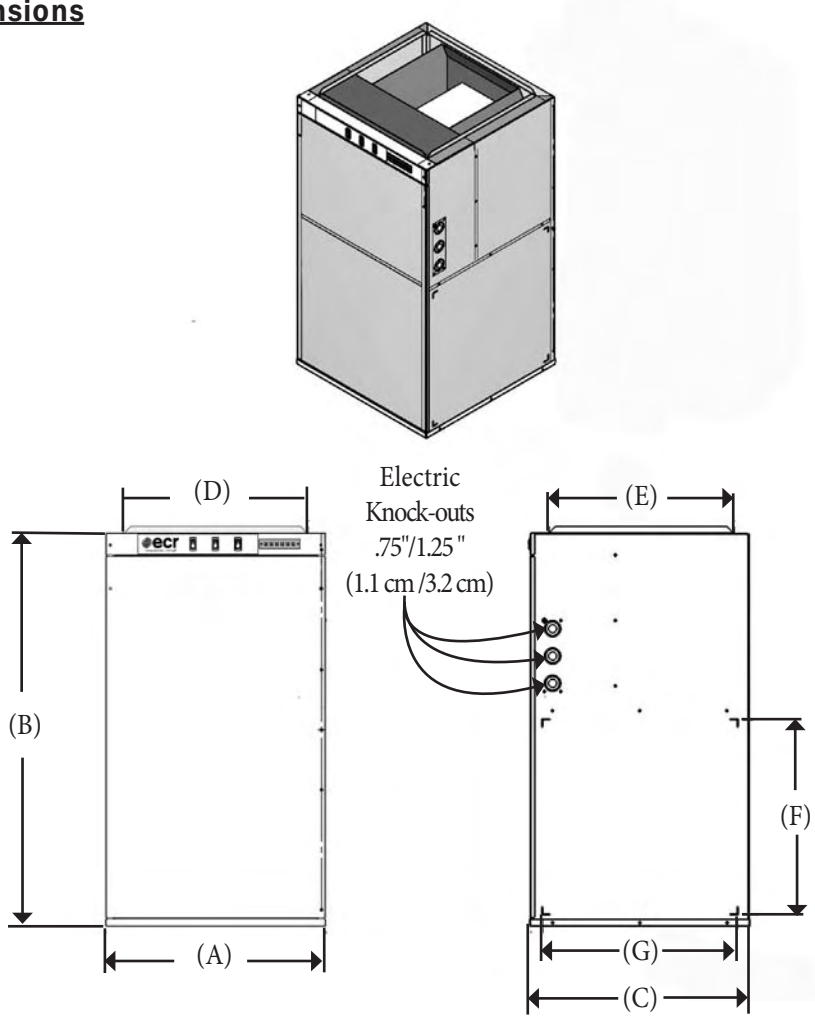

Table 1-1 : Physical Data								
Size	TON	Width (A)	Height (B)	Depth (C)	W/A (DxE)	C/A (FxG)	Weight	
							Shipping	Unit
10kw	3 TON	20" (50.8 cm)	36" (91.4 cm)	20" (50.8 cm)	17"x17" (43.2 x 43.2 cm)	18"x18" (45.7 x 45.7 cm)	87 lb (39.5 kg)	79 lb (35.8)
15kw	3 TON	20" (50.8 cm)	36" (91.4 cm)	20" (50.8 cm)	17"x17" (43.2 x 43.2 cm)	18"x18" (45.7 x 45.7 cm)	89 lb (40.4kg)	81 lb (36.7 kg)
18kw	3 TON	20" (50.8 cm)	36" (91.4 cm)	20" (50.8 cm)	17"x17" (43.2 x 43.2 cm)	18"x18" (45.7 x 45.7 cm)	91 lb (41.2 kg)	83 lb (37.6 kg)
20kw	3 TON	20" (50.8 cm)	36" (91.4 cm)	20" (50.8 cm)	17"x17" (43.2 x 43.2 cm)	18"x18" (45.7 x 45.7 cm)	91 lb (41.2 kg)	83 lb (37.6 kg)
23kw	3 TON	20" (50.8 cm)	36" (91.4 cm)	20" (50.8 cm)	17"x17" (43.2 x 43.2 cm)	18"x18" (45.7 x 45.7 cm)	93 lb (42.2 kg)	85 lb (38.6 kg)
23kw	5 TON	20" (50.8 cm)	36" (91.4 cm)	20" (50.8 cm)	17"x17" (43.2 x 43.2 cm)	18"x18" (45.7 x 45.7 cm)	98 lb (44.5 kg)	90 lb (40.8 kg)
27kw	5 TON	20" (50.8 cm)	36" (91.4 cm)	20" (50.8 cm)	17"x17" (43.2 x 43.2 cm)	18"x18" (45.7 x 45.7 cm)	100 lb (45.4 kg)	92 lb (41.7 kg)

IMPORTANT SAFETY INFORMATION

Table of Contents

READ AND SAVE THESE INSTRUCTIONS.

1.1 General

Furnace installation shall be completed by qualified agency. See glossary for additional information.

This is the safety alert symbol. Symbol alerts you to potential personal injury hazards. Obey all safety messages following this symbol to avoid possible injury or death.

1.2 Become Familiar With Symbols Identifying Potential Hazards.

⚠ DANGER

Indicates a hazardous situation which, if not avoided, will result in death or serious injury

⚠ WARNING

Indicates a hazardous situation which, if not avoided, could result in death or serious injury.

⚠ CAUTION

Indicates a hazardous situation which, if not avoided, could result in minor or moderate injury.

NOTICE

Used to address practices not related to personal injury.

INTRODUCTION

⚠ WARNING

Jumpers shall not be used to simulate heat demand which, if not avoided, could result in death or serious injury.

⚠ WARNING

Risk of electrical shock. Disconnect power before installation, servicing, maintenance or field wiring. Replace all panels before operating. If not avoided, could result in death or serious injury.

1.3 Important Safety Considerations:

- Wear safety glasses and gloves when performing installation, servicing or cleaning.
- Repairs shall be performed by a qualified service agency.
- Furnace should be inspected by a qualified service agency annually.
- Performance decrease may be result of unbalanced static pressure or dirty air filters.
- Where required by the authority having jurisdiction, installation shall conform to CSA C22.1, NFPA 70, NEC.

2.1 Introduction

- Each unit is inspected before shipment to verify every component is operating efficiently.
- Safe and dependable operation depends upon proper installation and compliance with all national, local codes and standards.

2.2 General Requirements And Specifications

- Location - Locate unit centrally to area being heated.
- Positions - Unit can installed vertically, or horizontally for down-flow operation.
  - A. Horizontally: position so door is not on top, door should be located at side of furnace .
  - B. Vertical, down-flow use "L" or "T" shaped plenum with no openings or registers directly below furnace.
- Installation Clearances -
  - A. Approved for 0" clearance. Check data label attached to furnace for additional clearance information.
  - B. Temperature Rise - Shipped to operate at 0.20" (5mm) W.C. (50Pa) external static pressure.
  - C. Certified for operation up to 0.50" (13mm) W.C. (125 Pa).
  - D. Check temperature rise, see Table 2-2 page 5, if necessary adjust motor speeds to achieve proper temperature rise.
- Service Clearance
  - A. Service from front of unit.
  - B. 24" (610mm) minimum clearance from front.

REQUIREMENTS AND SPECIFICATIONS

Table 2-1 : Requirements and Specifications

ELECTRICAL SPECIFICATIONS (240 VOLT/60HZ)					
Model	**Max Amps**	**Min. Circuit Ampacity**	**Max. Fuse Size**	**Wire Size Al**	**Wire Size CU**
ECF310	45	56.3	60	3	4
ECF315	65.9	82.3	90	1	3
ECF318	78.4	97.9	100	1/0	1
ECF320	86.7	108.4	125	2/0	1
ECF323	96.8	120.2	125	3/0	1/0
ECF323	99.8	124.8	125	3/0	1/0
ECF327	116.5	145.6	150	4/0	3/0

REQUIREMENTS AND SPECIFICATIONS

Table 2-2 : Requirements and Specifications								
240 VOLTS SINGLE PHASE						TEMPERATURE RISE RANGE (.20 to .50" W.C.)		
Model	KW	BTUH	Amps Including Motor	HP	Blower	°C	°F	*Speed
ECF310	10kw	34120	42	1/3	10-8	23°-30°C	41°-54°F	Low
ECF315	15kw	51180	62	1/3		24°-28C	43°-50°F	Med-Low
ECF318	18kw	61420	78	1/3		29°-33C	52°-60°F	Med-Low
ECF320	20kw	68240	81	1/3		32°-37C	58°-66°F	Med-Low
ECF323	23kw	78480	96	1/3		36°42C	67°-76°F	Med-Low
				3/4	12-10T	23°-26°C	41°-46°F	Med-Low
ECF327	27kw	92130	113	3/4		24°-27°C	43°-49°F	Med-Hi

For 208 V Multiply by .867, for 220 V Multiply by .917, for 230 V Multiply by .958

Factory Settings. Subject to change without notice.

Table 2-2 continued: Requirements and Specifications						
10-8 Blower						
Speed	Flow Rate	Static Pressure (Inches of Water Column)				
		0.1	0.2	0.3	0.4	0.5
LOW**	CFM	757	757	724	691	578
	L/s	357.3	357.3	341.7	326.1	272.8
MED-LOW	CFM	1135	1092	1047	1000	952
	L/s	535.7	515.4	494.1	472	449.3
MED-HIGH	CFM	1328.5	1292	1236	1196	1156
	L/s	627	609.8	583.3	564.5	545.6
HIGH	CFM	1544	1497	1449	1368	1364
	L/s	728.7	706.5	683.9	645.6	643.7
12-10T Blower						
LOW**	CFM	1560	1498	1477	1410	1364
	L/s	736.2	707	697.1	665.5	643.7
MED-LOW	CFM	1860	1791	1700	1622	1582
	L/s	877.8	845.3	802.3	765.5	746.6
MED-HIGH	CFM	2060	1962	1800	1780	1740
	L/s	972.2	926	849.5	840.1	821.2
HIGH	CFM	2090	2027	2010	1930	1800
	L/s	986.4	956.6	948.6	910.9	849.5
WARNING: ** Speed can only run with heater OFF, for cooling/ventilation purposes only						

COMPONENT LISTING

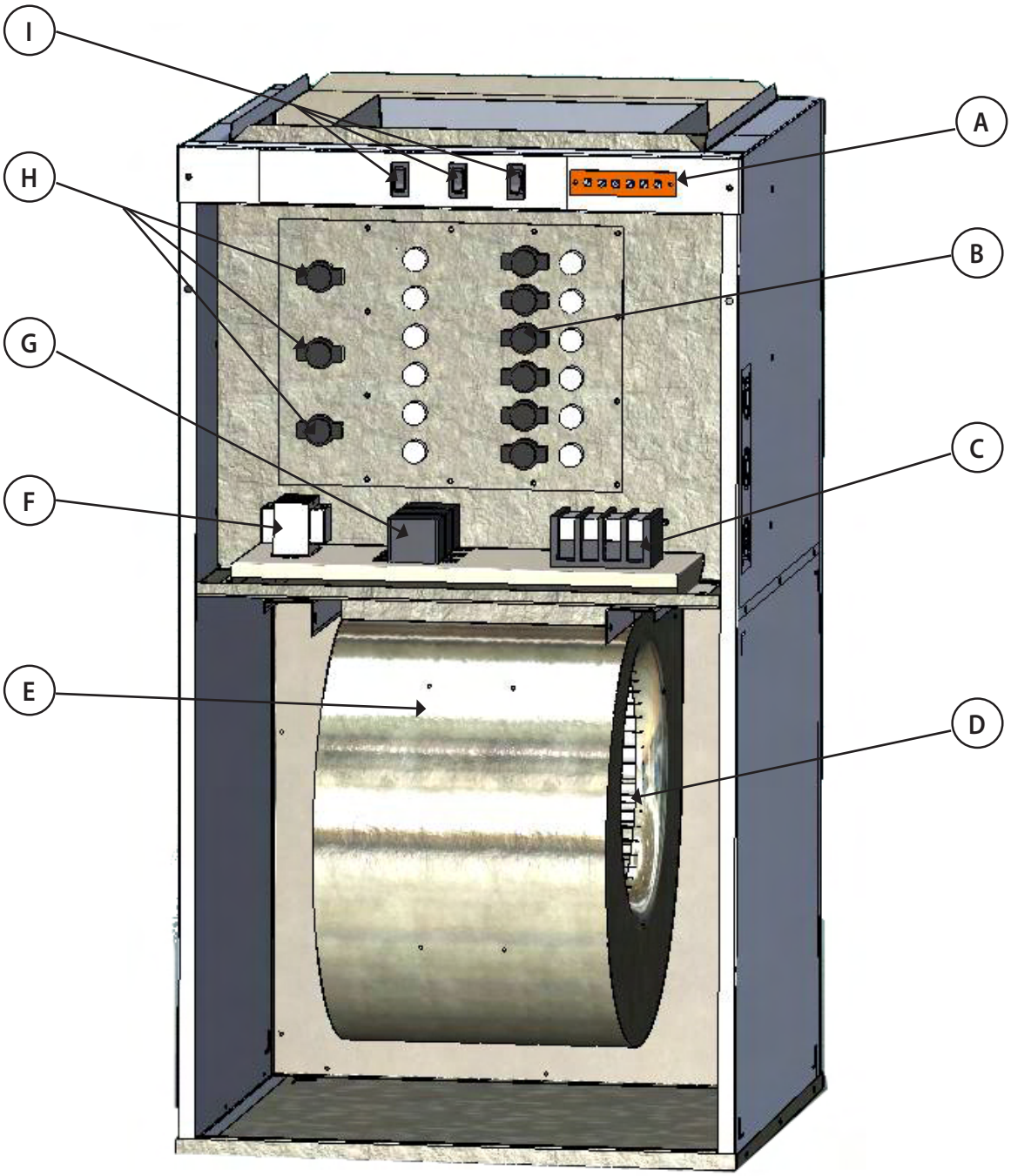

A. Thermostat Strip

B. Limit Switches

C. Terminal Block

D. Blower Motor

E. Blower

F. Transformer

G. Blower Relays

H. Sequencers

I. Control Switches

OPERATION AND INSTALLATION OPTIONS

3.1 Operating Options

- Shipped in "Standard Heating Mode"
  - A. Fan Control - Automatic
  - B. Energy saver switch - Cold Weather
  - C. Mode Selector Switch - Heating
- Blower will run at heating speed.
- Furnace heats up - automatically switches to medium speed (if originally set to run at low speed).
- Timing of blower speed changes depends on Season switch setting (Cold or Mild weather).
- May change from Standard Heating Mode using controls built into furnace as follows:

A. *FAN CONTROL SWITCH* - Used to control fan speed, also used in conjunction with Continuous speed switch.

- AUTOMATIC - blower motor will operate at higher speed in accordance with heating cycle.
- CONTINUOUS LOW SPEED - blower motor will operate continuously during the heating off cycle at low speed.

B. *ENERGY SAVER SWITCH* - Spring or Fall may require less rapid response when thermostat calls for heat.

- MILD WEATHER- longer time cycle, with lower energy during the cycle.
- When using a 2 stage thermostat or an outdoor thermostat, leave this in mild weather position
- COLD WEATHER - allows heating elements to come online at full capacity.

C. *MODE SELECTOR SWITCH*

- VENTILATION - continuous air circulation with no heat.
- HEATING - fan is OFF unless there is a call for heat. Normal heating mode.

4.1 Installation Information

Cold Air Return

- Side Mounting
  - A. Duct can be attached to either side of furnace.
  - B. Four cutouts available for side or bottom return.
  - C. Mount optional filter frame to furnace over opening with open side of frame facing front.
  - D. Attach 18" x 18" (457mm x 457mm) air duct to flanges on filter frame (optional).

4.2 Electrical Wiring - Power Supply

- Furnace shipped completely factory wired.
- From separate breaker, two wire plus ground supply wire is required.
- Ground conductor must be firmly attached to ground lug in furnace and supply wires to terminal block in furnace.
- Wiring shall conform to latest editions of CEC, NEC, local codes and authority having jurisdiction.
- Copper or aluminum wire of appropriate size may be used.

4.3 Connecting and Adjusting Low Voltage Thermostat

- Use only class 1 wires inside furnace compartments
- Attach thermostat wires to low voltage terminal, located on top front of furnace.
- Follow all diagrams and instructions supplied by the Thermostat manufacturer.
- R & W1 & W2 terminals control single stage heating
- R & Y terminals control cooling.
- Y single stage cooling as first and only stage.
- Two stage cooling, Y first stage, Y_2 connected externally second stage.
- R & G control cooling speed fan.

NOTICE
Set heat anticipator in Thermostat properly before turning furnace ON to prevent damage to thermostat.

- Heat Anticipator Setting

- Verify current draw with AC meter, set at 2A range.
  A. Set anticipator at highest setting.
  B. Disconnect W_1 thermostat wire from furnace low voltage terminal.
  C. Connect AC meter between W1 terminal on circuit board and loose W_1 wire.
  D. Start furnace, turn thermostat up and allow it to run, with element ON, for 3-4 minutes.
  E. Read current draw on meter and reset anticipator to match meter reading.

5.1 Mobile Home Use

- Models 10,15,18,20 furnaces are certified for "L" and "T" shape shallow duct installation.

- Recommended minimum size floor opening 14-1/4" x 14-1/4" (362mm x 362mm).

- Duct system shall be designed with external static pressure of system not exceeding maximum external static pressure of 0.50" (13mm) W.C. (125Pa).

Table 5-1 SHALLOW DUCT AREA REQUIREMENTS

DUCT DEPTH	DUCT WIDTH
4" (102mm)	16" (406mm)
5" (127mm)	13" (330mm)
6" (152mm)	10" (254mm)

OPTIONAL EQUIPMENT

6.1 Optional Equipment

- Two-Stage or Outdoor Thermostat
  - A. Season Select switch in Mild position.
  - B. Follow manufacture's directions supplied with thermostat.
  - C. See Table 6-1 for heat supply when in use.

TABLE 6-1 - HEAT SUPPLY WITH USE OF TWO STAGE OR OUTDOOR THERMOSTAT	
Mild (1st Stage)	Cold (2nd Stage)
Element 1 - on instantly	Blower on instantly
Blower on 10 sec.	Elements 1,3,5 on 10 sec.
Element 2 on 25 sec.	Element 2 on 40 sec.
27 KW Element 3 on 10 sec.	Element 4 on 50 sec.
27 KW Element 4 on 50 sec.	Element 6 on 60 sec.

- Air Conditioning
  - A. Furnace comes complete with all controls for addition of air conditioning.
  - B. Evaporator coil may be installed by local contractor with sheet metal plenum.
  - C. Coil shall be centered over outlet of furnace 4" (102mm) to 6" (152mm) above top of furnace.
  - D. No air may bypass cooling coil during operation.
  - E. Bypass damper for heating if: discharge opening is larger that the coil, and ductwork is correspondingly larger than coil.
  - F. Air flow is directed through the coil when damper closed in summer.
  - G. Air flow to bypass coil in winter when damper is open.
  - H. See *figure 6-1* for typical air conditioning field wiring connections.
  - I. A-Coil to be downstream of furnace.
- Electronic Air Cleaners and/or Powered Furnace Humidifiers
  - A. Units operate at 120V and cannot be directly powered through the furnace.
- Air Filter Kit please see Parts List.

FIGURE 6-1 Wiring Diagram 24V (with Air Conditioning)

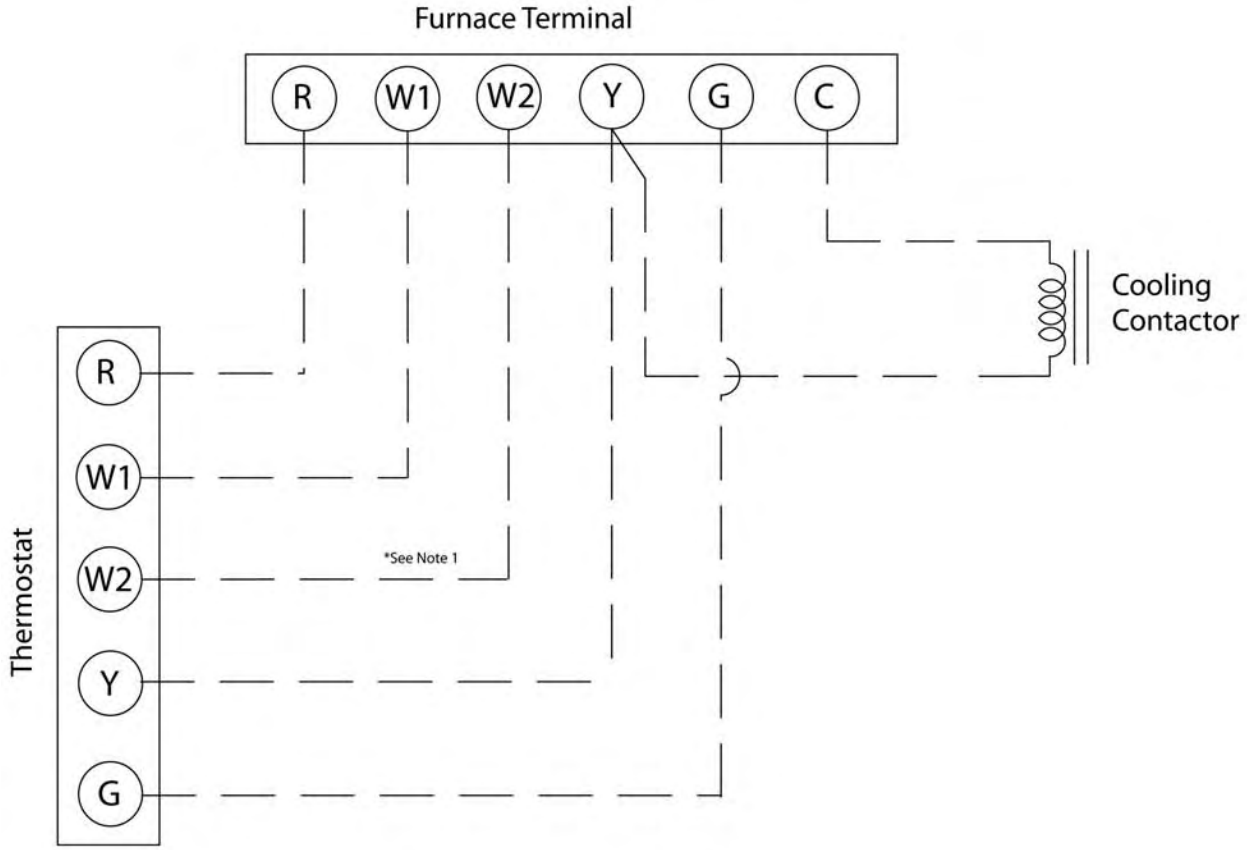

*Note 1 : If equipped with 2 stage heating thermostat

GENERAL MAINTENANCE

7.1 General Maintenance

- MOTOR - Motor is lubricated for life and needs no oiling.
- FILTERS -. Inspect and replace when dirty. If using continuous blower operation inspect twice a year or more if necessary (filters are field supplied and required for all installations).

NOTE: Each element has automatic reset thermal cut-out which is set to open at 165°F (74°C). Element will be de-energized if it opens, until cut-out resets.

⚠ WARNING

Turn OFF 240 V power supply before removing front panel, failure to do so could result in death or serious injury.

Limit opens when airflow is reduced because of blocked ductwork or very dirty filters.

WIRING DIAGRAMS

8.1 FIGURE ECF Ladder Diagram

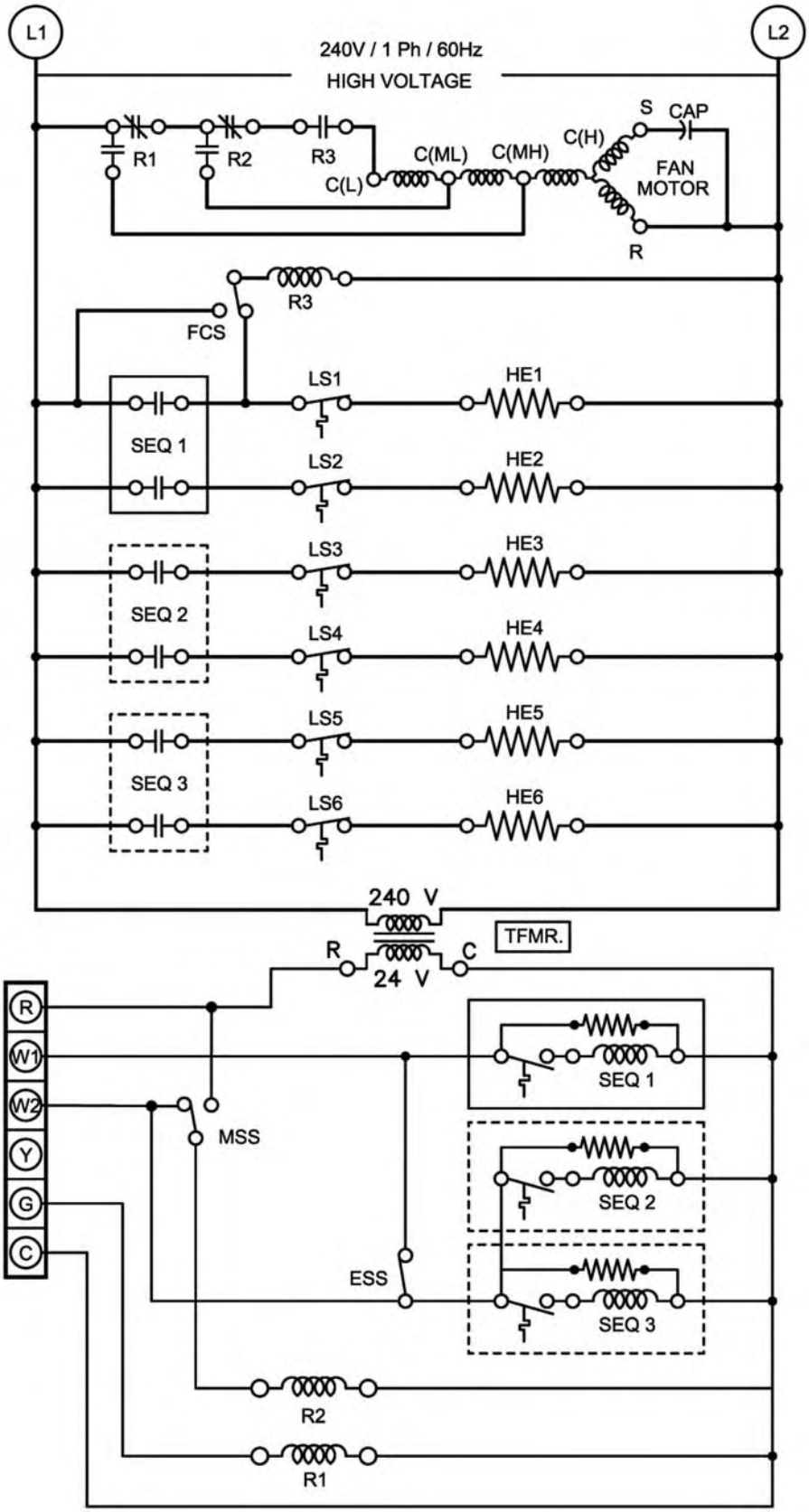

LEGEND ENGLISH

FACTORY HIGH VOLTAGE ——
FACTORY LOW VOLTAGE ——

COLOR CODE

BLK – BLACK	WHT – WHITE
BLU – BLUE	BRN – BROWN
RD – RED	PUR – PURPLE
ORG – ORANGE	YEL – YELLOW

COMPONENT CODE

CB – CIRCUIT BREAKER
HE – HEATER ELEMENT
LS – LIMIT SWITCH
SEQ – SEQUENCER
R1 – COOLING RELAY
R2 – HEATING BLOWER RELAY
R3 – HEATING BLOWER RELAY
FCS – FAN CONTROL SWITCH
MSS – MODE SELECTOR SWITCH
ESS – ENERGY SAVER SWITCH

HEATER ELEMENTS USED

10kw – HE1/HE2
15kw – HE1/HE2/HE3
18 & 20kw – HE1/HE2/HE3/HE4
23kw – HE1/HE2/HE3/HE4/HE5
27kw – HE1/HE2/HE3/HE4/HE5/HE6

NOTES:

1 –Units must be wired and grounded in accordance with national (NEC or CEC) and/or local codes.
2 –Use copper conductors only.

WIRING DIAGRAMS

8.2 FIGURE ECF Wiring Schematic

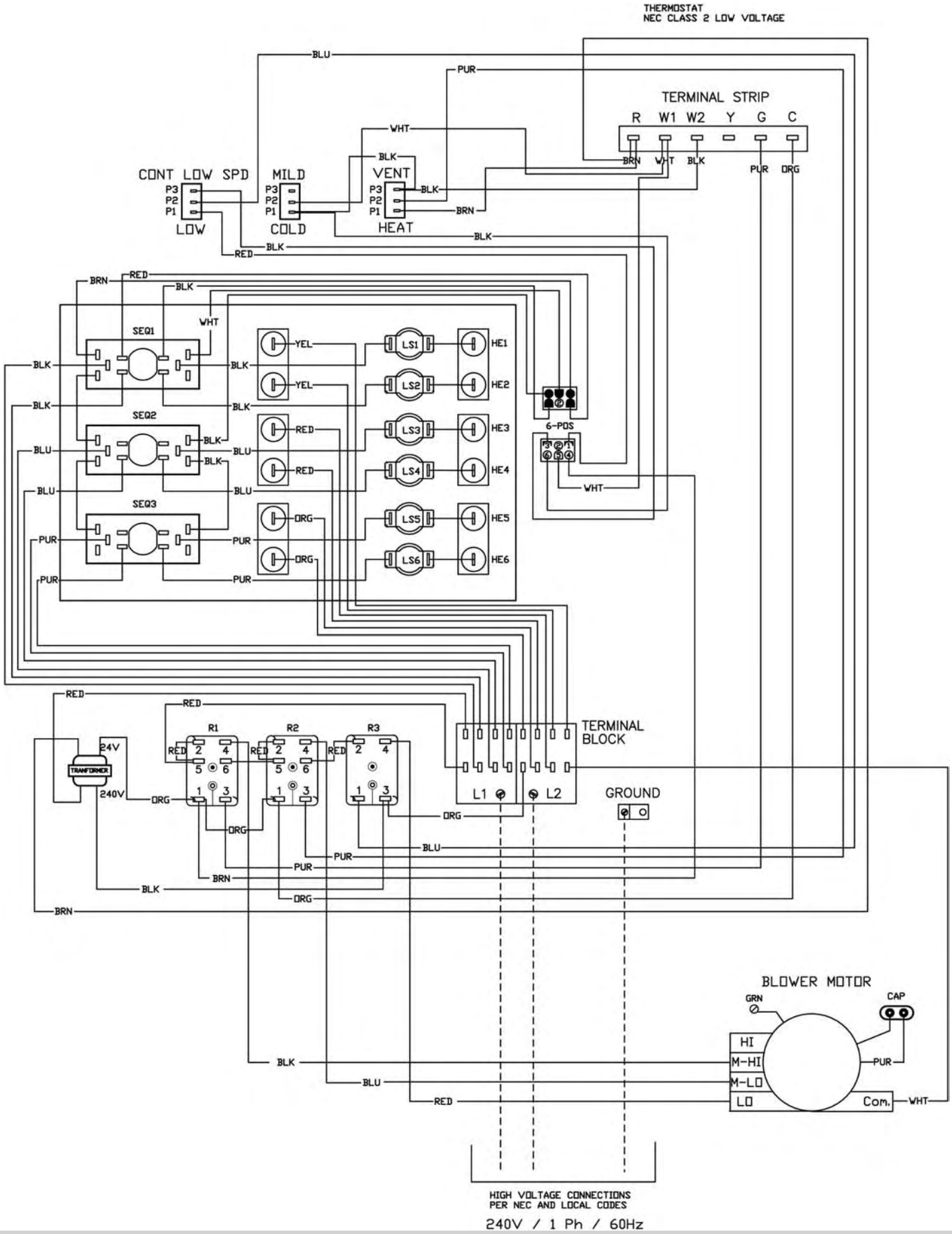

TROUBLESHOOTING

9.1 Troubleshooting

- Identify if problem results from furnace, thermostat or thermostat wiring using voltmeter.
- If furnace will **not start:** Turn thermostat to highest setting. If there is 24 Volts between W_1 and C terminal thermostat has closed, indicates fault is in furnace. If there is NOT 24 Volts between W_1 and C terminal , problem exists with thermostat or its connecting wiring.
- If furnace will **not turn OFF:** Turn thermostat to lowest setting. If there is NOT 24 volts between W_1 and C and furnace continues to run, thermostat has opened properly and fault exists within furnace. If there is 24 Volts between W_1 and C, fault exists in thermostat or its connecting wiring.
- After fault area is identified by use of volt meter, Table 9-1 can be used to verify internal components.

TABLE 9-1 TROUBLESHOOTING

PROBLEM	Check
Furnace will not turn **ON**	Thermostat - is there a call for heat?
	Circuit breaker or fuse is open
	Motor seized or Capacitor failed
	Fan Control Switch failed
	Sequencers failed
	Transformer failed
Motor Runs Continuously	Continuous Speed Switch is in continuous position
	Thermostat wires incorrectly attached to furnace
Elements on, motor does not run	Motor sized or capacitor failed
Motor **ON** and **OFF** in long or short cycles	Heat anticipator in thermostat incorrectly set or may be defective.
Must set thermostat much higher (lower) than desired temperature	Thermostat is not level or is out of calibration
Not enough Heat	Defective element or relays confirm all elements are energized
	"Season Select" switch in "Mild" position
	Safety limits opening, possible duct obstruction or dirty filters, air flow is restricted
	Defective or incorrectly wired two-stage or outdoor thermostat. Confirm W_2 energized
	Lack of enough cold air returns in house
Improper operation of two-stage or thermostat	"Season Select" switch not in "Mild" position

GLOSSARY

Glossary

- ANSI- American National Standards Institute, Inc. As voice of U.S. standards and conformity assessment system, American National Standards Institute (ANSI) empowers its members and constituents to strengthen U.S. marketplace position in global economy while helping to assure safety and health of consumers and protection of environment.

- AUTHORITY HAVING JURISDICTION - Individual or organization that adopts and enforces codes, rules, and by-laws which govern various concerns of community. Commonly referred to as "final authority" for any matters relating to LIFE SAFETY and BUILDING CONSTRUCTION within that specific community.

- Btu- Abbreviation for British Thermal unit, which is quantity of heat required to raise temperature of 1 pound of water 1 degree Fahrenheit.

- CEC- Canadian Electrical Code, Electrical standards are part of our everyday lives. From the products you buy to make your life more enjoyable to the systems of lines and towers that deliver the electricity to power these products, Canadian Standards Associations (CSA) offers over 700 CSA electrical standards and application tools to keep you safer.

- CFM - A standard measurement of airflow that indicates how many cubic feet of air pass by a stationary point in one minute. The higher the number, the more air is being forced through the system. The volumetric flow rate of a liquid or gas in cubic feet per minute. 1 CFM equals approximately 2 liters per second.

- CSA - CSA International is a Nationally Recognized Testing Laboratory (NRTL) accredited by OSHA and ANSI in the U.S. and by SCC in Canada. CSA International can test and certify your products following standardized test protocols-in laboratories across North America.

- HIGH-VOLTAGE - Circuit involving potential of not more than 600 volts and having circuit characteristics in excess of those of low-voltage circuit.

- LITER PER SECOND (L/s) - A standard measurement of airflow that indicates how many liters of air pass by a stationary point in one second. The higher the number, the more air is being forced through the system. The volumetric flow rate of a liquid or gas in Liters/second. 1L/s equals approximately .5 CFM.

- NEC - National Electric Code The NEC is developed by NFPA's Committee on the National Electrical Code, which consists of 19 code-making panels and a technical correlating committee. Work on the NEC is sponsored by the National Fire Protection Association. The NEC is approved as an American national standard by the American National Standards Institute (ANSI). It is formally identified as ANSI/NFPA 70.

- NFPA 70 is a United States standard for the safe installation of electrical wiring and equipment. It is part of the National Fire Codes series published by the National Fire Protection Association (NFPA). "National Electrical Code" and "NEC" are registered trademarks of the NFPA. While the NEC is not itself a U.S. law, NEC use is commonly mandated by state or local law, as well as in many jurisdictions outside of the United States. [1] The NEC codifies the requirements for safe electrical installations into a single, standardized source.

- QUALIFIED AGENCY - Any individual or firm or company that either in person or through representative is engaged in and responsible for (a) installation, testing, or replacement of gas piping or (b) connection, installation, testing, repair, or servicing of appliances and equipment that is experienced in such work, that is familiar with all precautions required and that has complied with all requirements of authority having jurisdiction.

- SCC - The Standards Council of Canada (SCC) facilitates the development and use of national and international standards and accreditation services to enhance Canada's competitiveness and social well-being.

- External Static Pressure - This is the difference between the air pressure measured at the inlet of the furnace and outlet of the furnace. Usually expressed in inches of water column (" W.C.).

- Temperature rise - The difference between the temperature of the air entering the furnace, and the temperature of the air exiting the furnace. Sometime referred to as Δt.

- W.C. - Water Column is a pressure measurement. This is the pressure exerted by a vertical column of water. Usually expressed in "inches".

ecr

innovative living™

ecr

innovative living™

An ISO 9001-2008 Certified Company

2201 Dwyer Ave
Utica, NY 13501
www.ecrinternational.com

kiwa Certified

ISO 9001 QUALITY

QUALITY MANAGEMENT